V1.1 NOTE: THIS DEVICE IS ROHS COMPLIANT.

REVISIONS							
SYM	DESCRIPTION	DATE	APPROVED	SYM	DESCRIPTION	DATE	APPROVED
△				△			
△				△			
**CUSTOMER DRAWING FOR REFERANCE ONLY, SAMPLES APPROVAL ARE REQUIRED!!							201

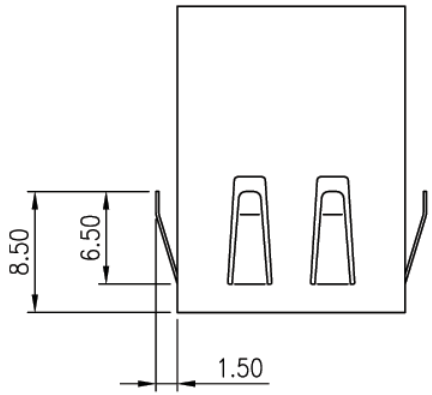

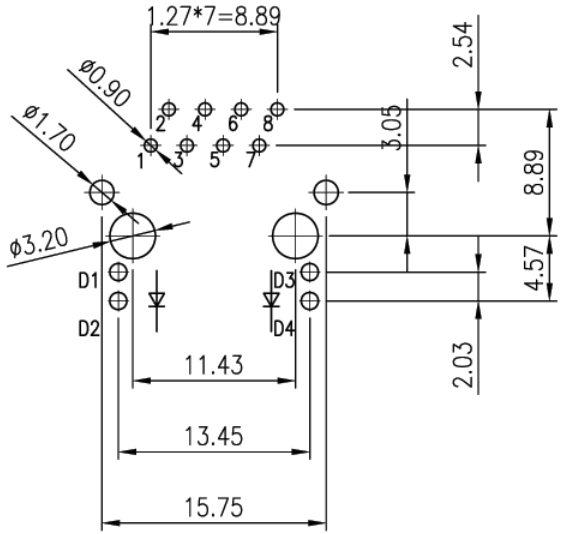

RECOMMENDED P.C.B. LAYOUT

SCHEMATIC

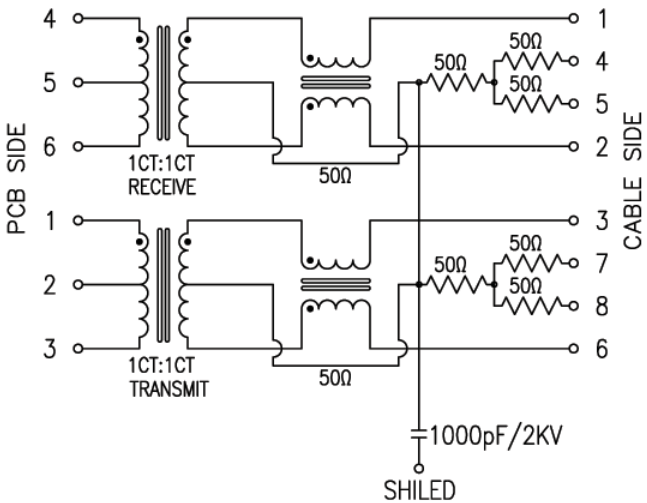

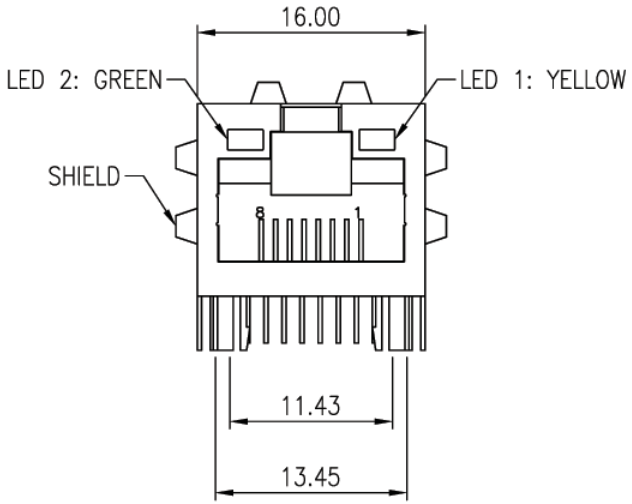

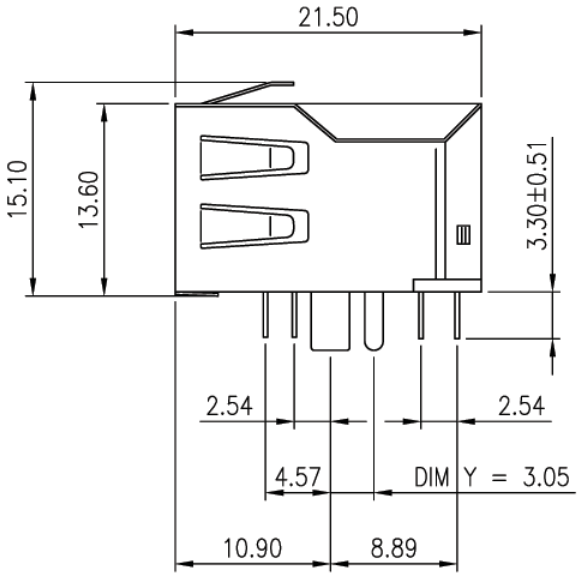

ORDER INFORMATION:
MJKf4629-Pa88GXSb-D-L3
MJK: MODULAR JACK
f: TRANSFORMER
4629: SERIES NO.
Pa: PCB TYPE, RIGHT ANGLE
88: NO. OF CONTACT, 8P8C
GX: CONTACT PLATING OPTION
Gft: GOLD FLASH ON CONTACT, TIN PLATED ON SOLDER TAIL
G30t: 30u" GOLD ON CONTACT, TIN PLATED ON SOLDER TAIL
Sb: SHIELDED WITH PANEL GROUNDING TAB
D: DIM Y = 3.05mm, PLASTIC PEG IN THE FRONT
L3: LED 1: YELLOW, LED 2: GREEN

ELECTRICAL SPECFICATIONS@25°C:
TURN RATIO(±2%): TRANSMIT= 1CT:1CT, RECEIVE= 1CT:1CT
INSERTION LOSS(1~100MHz): -1.0dB MAX.
RETURN LOSS(dB MIN@100Ω):
TX: -20dB(1-30MHz), -15dB(30-60MHz), -11dB(60-80MHz)
RX: -20dB(1-30MHz), -17dB(30-60MHz), -15dB(60-80MHz)
CROSS TALK(dB MIN): -30dB(1-100MHz)
CMR(dB MIN): -30dB(1-100MHz)
HI-POT TEST: 1500Vrms/60SEC
OCL(100KHz/0.1V@8mA): 350uH MIN

In development

TOLERANCES UNLESS OTHERWISE SPECIFIED ±0.25			SIGNATURES		DATE	MODEL
			DRAWN	KEN	03/JUL/06'	TITLE MODULAR JACK
SYMBOL △	UNIT mm	SCALE 2/1	CHECKED	WENDY	03/JUL/06'	NO. MJKf4629-Pa88GXSb-D-L3
			APPROVALS			

Machrone