V1.1

REVISIONS							
SYM	DISCRIPTION	DATE	APPROVED	SYM	DISCRIPTION	DATE	APPROVED
△				△			
△				△			

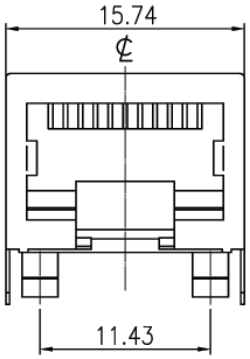

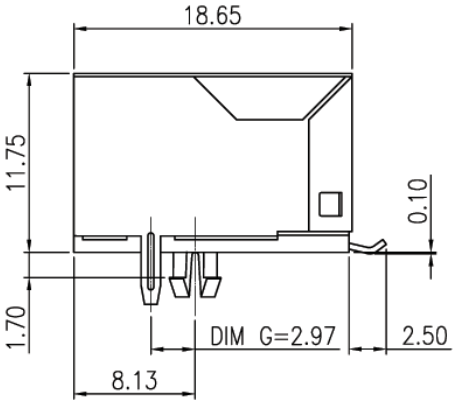

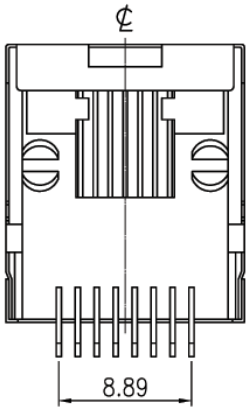

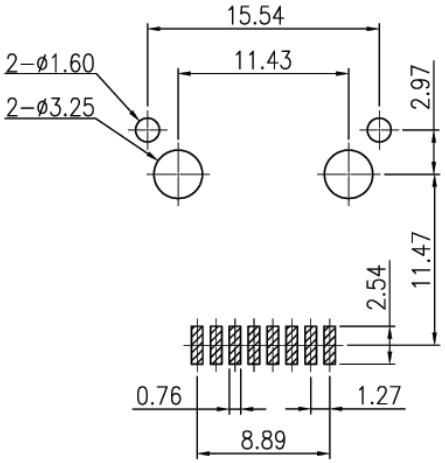

PCB LAYOUT

MATERIAL:
SHIELDED: 0.20mm THICKNESS COPPER ARROY WITH NICKEL PLATED.
HOUSING: NYLON-46 WITH GLASS FIBER UL-94V-0 STANDARD COLOR BLACK.
INSERT: NYLON-46 WITH GLASS FIBER UL-94V-0 ,COLOR BLACK.
CONTACTS: 0.30mm THICKNESS PHOSPHOR BRONZE,GOLD PLATING
OVER NICKEL IN CONTACT AREA.
TIN PLATING OVER NICKEL IN SOLDER AREA.
GOLD PLATING: SELECTIVE GOLD PLATING.

ORDER INFORMATION:
MJK004-Rt881GXXXS-G
MJK: MODULAR JACK
004: SERIES NO.
Rt: PCB TYPE,RIGHT ANGLE SURFACE MOUNT TYPE
88: NO. OF CONTACT, 8P8C
1: COLOR OF PLASTIC, BLACK
GXXX: CONTACT PLATING OPTION
-Gf: GOLD FLUSH
-Gft: GOLD FLUSH ON CONTACT, TIN PLATING ON SOLDER TAIL
-G15t: 15u"GOLD ON CONTACT, TIN PLATING ON SOLDER TAIL
-G30t: 30u"GOLD ON CONTACT, TIN PLATING ON SOLDER TAIL
-G50t: 50u"GOLD ON CONTACT, TIN PLATING ON SOLDER TAIL
S: SHIELDING OPTION,WITHOUT PANEL GROUNDING TAB
G:DIM G=2.97 mm,METEL PEG IN THE FRONT

TOLERANCES UNLESS OTHERWISE SPECIFIED ±0.25			SIGNATURES		DATE	MODEL
			DRAWN	VIVI	11/JUN/03'	TITLE MODULAR JACK
SYMBOL	UNIT	SCALE	CHECKED	ZOLA	11/JUN/03'	NO.
△	mm	3/1	APPROVALS			MJK004-Rt881G___S-G

Machrone

Website:www.machrone-intl.com Email: info@machrone-intl.com Tel: (65) 6274-0566

All specification are subjected to change without prior notice