V1-1

REVISIONS							
SYM	DESCRIPTION	DATE	APPROVED	SYM	DESCRIPTION	DATE	APPROVED
△				△			
△				△			
**CUSTOMER DRAWING FOR REFERANCE ONLY, SAMPLES APPROVAL ARE REQUIRED!!							100

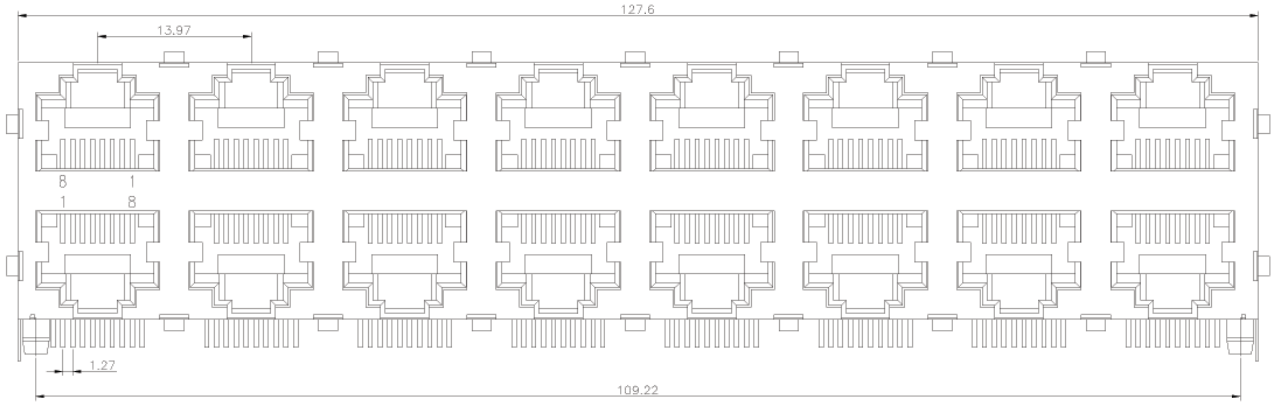

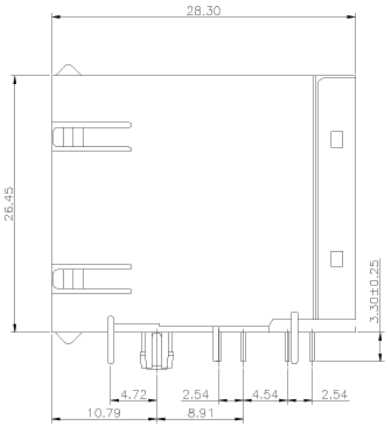

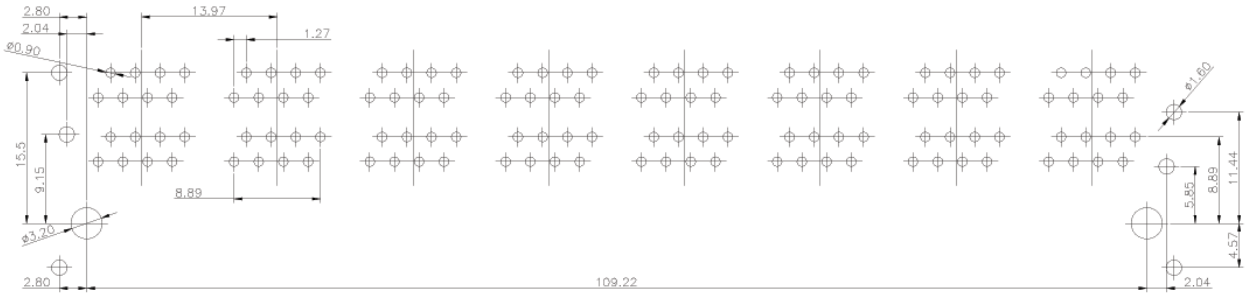

RECOMMENDED P.C.B. LAYOUT

SCHEMATICS

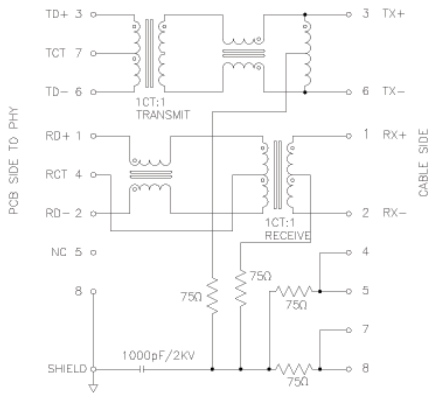

89G-1201ND2

ELECTRICAL SPECIFICATION @25°C-OPERATING TEMPERATURE 0°C TO 70°C
TURNS RATIO : 1CT:1 (TX), 1CT:1 (RX)
INSERTION LOSS (dB TYP) : -1.0 (1-80MHz), -1.2 (100MHz)
RETURN LOSS (dB TYP) 100Ω ±15Ω :
-16 (1-60MHz), -12 (60-100MHz)
CROSSTALK (dB MIN) : -35(100MHz)
COMMON MODE REJECTION (dB TYP) : -30 (1-100MHz)
HIPOT (Vrms) : 1500 (@60Hz 1MIN)
OCL : 350uH MIN@8mA bias

TOLERANCES UNLESS OTHERWISE SPECIFIED ±0.25			SIGNATURES		DATE	MODEL
			DRAWN	Frederick	24/JUN/05'	TITLE MODULAR JACK
SYMBOL △	UNIT mm	SCALE 1/1	CHECKED	Sam	24/JUN/05'	NO. 89G-1201ND2
			APPROVALS			

Machrone